Time-Invariant Linear Quadratic Regulators

Robert Stengel
Optimal Control and Estimation MAE 546
Princeton University, 2017

- Asymptotic approach from time-varying to constant gains
- Elimination of cross weighting in cost function
- Controllability and observability of an LTI system
- Requirements for closed-loop stability
- Algebraic Riccati equation
- Equilibrium response to commands

Continuous-Time, Linear, Time-Invariant System Model

$$\Delta\dot{\mathbf{x}}(t) = \mathbf{F}\Delta\mathbf{x}(t) + \mathbf{G}\Delta\mathbf{u}(t) + \mathbf{L}\Delta\mathbf{w}(t),$$
$$\Delta\mathbf{x}(t_0)\ \textit{given}$$
$$\Delta\mathbf{y}(t) = \mathbf{H}_\mathbf{x}\Delta\mathbf{x}(t) + \mathbf{H}_\mathbf{u}\Delta\mathbf{u}(t) + \mathbf{H}_\mathbf{w}\Delta\mathbf{w}(t)$$

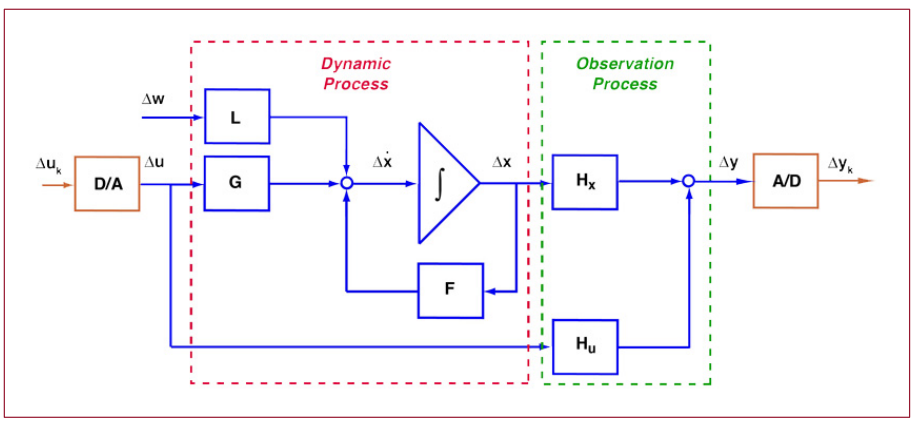

Comment: Δ(.) notation distinguishes linear-system variables from nonlinear-system variables

Linear-Quadratic Regulator: Finite Final Time

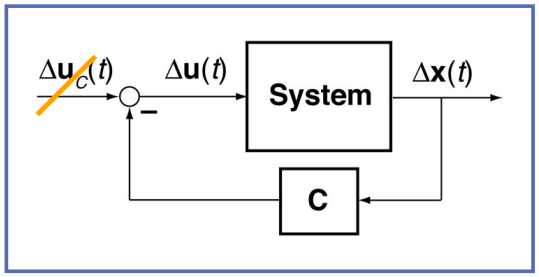

$$\Delta\dot{\mathbf{x}}(t) = \mathbf{F}\Delta\mathbf{x}(t) + \mathbf{G}\Delta\mathbf{u}(t)$$

$$\Delta\mathbf{u}(t) = -\mathbf{R}^{-1}\left[\mathbf{M}^T + \mathbf{G}^T\mathbf{P}(t)\right]\Delta\mathbf{x}(t) = -\mathbf{C}(t)\Delta\mathbf{x}(t)$$

$$\Delta^2 J = \frac{1}{2}\Delta\mathbf{x}^T(t_f)\mathbf{P}(t_f)\Delta\mathbf{x}(t_f) + \frac{1}{2}\left\{\int_0^{t_f}\begin{bmatrix}\Delta\mathbf{x}^T(t) & \Delta\mathbf{u}^T(t)\end{bmatrix}\begin{bmatrix}\mathbf{Q} & \mathbf{M}\\ \mathbf{M}^T & \mathbf{R}\end{bmatrix}\begin{bmatrix}\Delta\mathbf{x}(t)\\ \Delta\mathbf{u}(t)\end{bmatrix}dt\right\}$$

$$\dot{\mathbf{P}}(t) = -\left[\mathbf{F} - \mathbf{G}\mathbf{R}^{-1}\mathbf{M}^T\right]^T\mathbf{P}(t) - \mathbf{P}(t)\left[\mathbf{F} - \mathbf{G}\mathbf{R}^{-1}\mathbf{M}^T\right] + \mathbf{P}(t)\mathbf{G}\mathbf{R}^{-1}\mathbf{G}^T\mathbf{P}(t) + \left[\mathbf{M}\mathbf{R}^{-1}\mathbf{M}^T - \mathbf{Q}\right]$$

$$\mathbf{P}(t_f) = \mathbf{P}_f$$

Transformation of Variables to Eliminate Cost Function Cross Weighting

Original LTI minimization problem

$$\min_{\Delta\mathbf{u}_1} J_1 = \frac{1}{2}\int_0^{t_f}\left[\Delta\mathbf{x}_1^T(t)\mathbf{Q}_1\Delta\mathbf{x}_1(t) + 2\Delta\mathbf{x}_1^T(t)\mathbf{M}_1\Delta\mathbf{u}_1(t) + \Delta\mathbf{u}_1(t)\mathbf{R}_1\Delta\mathbf{u}_1(t)\right]dt$$

$$\text{subject to} \quad \Delta\dot{\mathbf{x}}_1(t) = \mathbf{F}_1\Delta\mathbf{x}_1(t) + \mathbf{G}_1\Delta\mathbf{u}_1(t)$$

Can we find a transformation such that

$$\min_{\Delta\mathbf{u}_2} J_2 = \frac{1}{2}\int_0^{t_f}\left[\Delta\mathbf{x}_2^T(t)\mathbf{Q}_2\Delta\mathbf{x}_2(t) + \Delta\mathbf{u}_2^T(t)\mathbf{R}_2\Delta\mathbf{u}_2(t)\right]dt = \min_{\Delta\mathbf{u}_1} J_1$$

$$\text{subject to} \quad \Delta\dot{\mathbf{x}}_2(t) = \mathbf{F}_2\Delta\mathbf{x}_2(t) + \mathbf{G}_2\Delta\mathbf{u}_2(t)$$

Artful Manipulation

Rewrite integrand of J_1 to eliminate cross weighting of state and control

$$\Delta\mathbf{x}_1^T(t)\mathbf{Q}_1\Delta\mathbf{x}_1(t)+2\Delta\mathbf{x}_1^T(t)\mathbf{M}_1\Delta\mathbf{u}_1(t)+\Delta\mathbf{u}_1(t)\mathbf{R}_1\Delta\mathbf{u}_1(t)$$
$$=\Delta\mathbf{x}_1^T(t)\left(\mathbf{Q}_1-\mathbf{M}_1\mathbf{R}_1^{-1}\mathbf{M}_1^T\right)\Delta\mathbf{x}_1(t)$$
$$+\left[\Delta\mathbf{u}_1(t)+\mathbf{R}_1^{-1}\mathbf{M}_1^T\Delta\mathbf{x}_1(t)\right]^T\mathbf{R}_1\left[\Delta\mathbf{u}_1(t)+\mathbf{R}_1^{-1}\mathbf{M}_1^T\Delta\mathbf{x}_1(t)\right]$$

$$\triangleq\Delta\mathbf{x}_1^T(t)\mathbf{Q}_2\Delta\mathbf{x}_1(t)+\Delta\mathbf{u}_2^T(t)\mathbf{R}_1\Delta\mathbf{u}_2(t)$$

The transformation produces the following equivalences

$$\Delta\mathbf{x}_2(t)=\Delta\mathbf{x}_1(t)$$
$$\Delta\mathbf{u}_2(t)=\Delta\mathbf{u}_1(t)+\mathbf{R}_1^{-1}\mathbf{M}_1^T\Delta\mathbf{x}_1(t)$$

$$\mathbf{Q}_2=\mathbf{Q}_1-\mathbf{M}_1\mathbf{R}_1^{-1}\mathbf{M}_1^T$$
$$\mathbf{R}_2=\mathbf{R}_1$$

(Q,R) and (Q,M,R) LQ Problems are Equivalent

$$\Delta\mathbf{x}_2(t)=\Delta\mathbf{x}_1(t)\Rightarrow$$
$$\Delta\dot{\mathbf{x}}_2(t)=\Delta\dot{\mathbf{x}}_1(t)$$

$$\Delta\mathbf{u}_2(t)=\Delta\mathbf{u}_1(t)+\mathbf{R}_1^{-1}\mathbf{M}_1^T\Delta\mathbf{x}_1(t)$$
$$\mathbf{Q}_2=\mathbf{Q}_1-\mathbf{M}_1\mathbf{R}_1^{-1}\mathbf{M}_1^T$$
$$\mathbf{R}_2=\mathbf{R}_1$$

$$\Delta\dot{\mathbf{x}}_2(t)=\mathbf{F}_2\Delta\mathbf{x}_2(t)+\mathbf{G}_2\Delta\mathbf{u}_2(t)$$
$$\Delta\dot{\mathbf{x}}_2(t)=\mathbf{F}_2\Delta\mathbf{x}_1(t)+\mathbf{G}_2\left[\Delta\mathbf{u}_1(t)+\mathbf{R}_1^{-1}\mathbf{M}_1^T\Delta\mathbf{x}_1(t)\right]$$
$$=\left(\mathbf{F}_2+\mathbf{R}_1^{-1}\mathbf{M}_1^T\right)\Delta\mathbf{x}_1(t)+\mathbf{G}_2\Delta\mathbf{u}_1(t)$$
$$=\Delta\dot{\mathbf{x}}_1(t)=\mathbf{F}_1\Delta\mathbf{x}_1(t)+\mathbf{G}_1\Delta\mathbf{u}_1(t)$$

$$\mathbf{G}_2=\mathbf{G}_1$$
$$\mathbf{F}_2=\mathbf{F}_1-\mathbf{G}_2\mathbf{R}_1^{-1}\mathbf{M}_1^T$$
$$=\mathbf{F}_1-\mathbf{G}_1\mathbf{R}_1^{-1}\mathbf{M}_1^T$$

- **Therefore, the 2 forms are equivalent**
- **Whatever we prove for a (Q,R) cost function pertains to a (Q,M,R) cost function**

Recall: LQ Optimal Control of an *Unstable* First-Order System

$$f = 1; \quad g = 1$$

$$\Delta\dot{x} = \Delta x + \Delta u; \quad x(0) = 1$$

$$\dot{p}(t) = -1 - 2p(t) + p^2(t)$$
$$p(t_f) = 1$$

$$\text{Control gain} = p(t)$$

$$\Delta u = -p(t)\Delta x$$

$$\Delta\dot{x} = [1 - p(t)]\Delta x$$

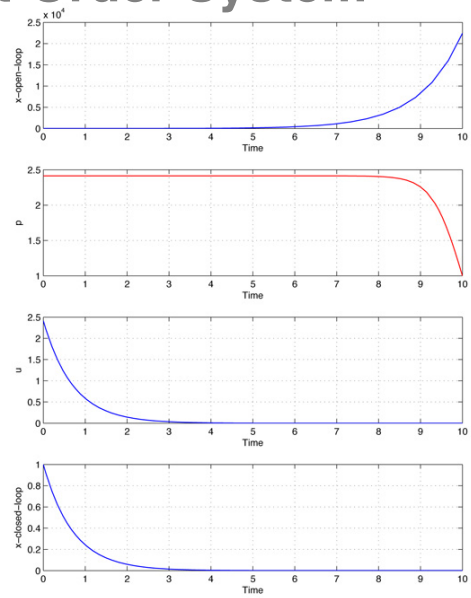

Riccati Solution and Control Gain for Open-Loop *Stable* and *Unstable* 1st-Order Systems

$$\mathbf{P}(t_f) = 0$$

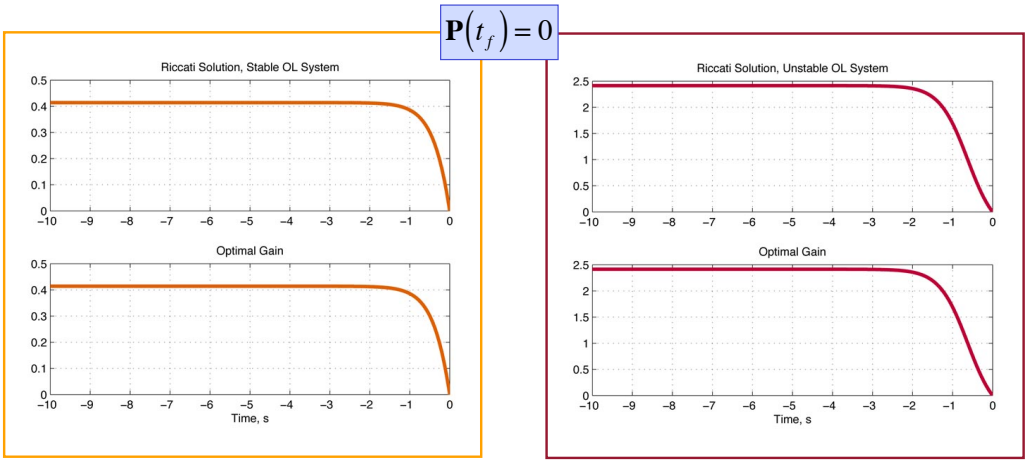

Variations in control gains are significant only in the last 10-20% of the illustrated time interval

As time interval increases, percentage decreases

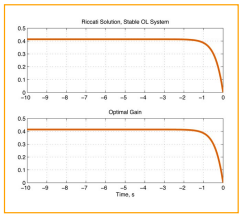

P(0) Approaches Steady State as t_f -> ∞

$$\text{With } \mathbf{M}=0, \quad \mathbf{P}(t_f)=\mathbf{0}$$

$$\mathbf{P}(0)=-\int_{t_f}^{0}\left\{-\mathbf{Q}-\mathbf{F}^T\mathbf{P}(t)-\mathbf{P}(t)\mathbf{F}+\mathbf{P}(t)\mathbf{G}\mathbf{R}^{-1}\mathbf{G}^T\mathbf{P}(t)\right\}dt$$

from t_f to 0

Progression of initial Riccati matrix is <u>monotonic</u> with increasing final time

for $t_{f_2} > t_{f_1}$,

$$J^*(t_{f_2}) \geq J^*(t_{f_1}), \quad \therefore \mathbf{P}_2(0) \geq \mathbf{P}_1(0)$$

(see eq. 5.4-9 to 5.4-11, *OCE*)

Rate of change <u>approaches zero</u> with increasing final time

$$\frac{d\mathbf{P}(0)}{dt} \xrightarrow[t_f \to \infty]{} \mathbf{0}$$

Algebraic Riccati Equation and Constant Control Gain Matrix

Steady-state Riccati solution (M = 0)

$$-\mathbf{Q}-\mathbf{F}^T\mathbf{P}(0)-\mathbf{P}(0)\mathbf{F}+\mathbf{P}(0)\mathbf{G}\mathbf{R}^{-1}\mathbf{G}^T\mathbf{P}(0)=\mathbf{0}$$

$$-\mathbf{Q}-\mathbf{F}^T\mathbf{P}_{SS}-\mathbf{P}_{SS}\mathbf{F}+\mathbf{P}_{SS}\mathbf{G}\mathbf{R}^{-1}\mathbf{G}^T\mathbf{P}_{SS}=\mathbf{0}$$

Steady-state control gain matrix

$$\mathbf{C}_{ss}=\mathbf{R}^{-1}\mathbf{G}^T\mathbf{P}\left(0\middle|t_f\to\infty\right)=\mathbf{R}^{-1}\mathbf{G}^T\mathbf{P}_{ss}$$

Controllability of a LTI System

Controllability: All elements of the state can be brought from arbitrary initial conditions to zero in finite time

$$\Delta\dot{\mathbf{x}}(t) = \mathbf{F}\Delta\mathbf{x}(t) + \mathbf{G}\Delta\mathbf{u}(t)$$

$$\Delta\mathbf{x}(0) = \Delta\mathbf{x}_0; \quad \Delta\mathbf{x}(t_{finite}) = \mathbf{0}$$

System is Completely Controllable if

Controllability Matrix =

$$\begin{bmatrix} \mathbf{G} & \mathbf{FG} & \cdots & \mathbf{F}^{n-1}\mathbf{G} \end{bmatrix} \text{ has Rank } n$$

$$n \times nm$$

Controllability Examples

For non-zero coefficients

$$\mathbf{F} = \begin{bmatrix} 0 & 1 \\ -\omega_n^2 & -2\zeta\omega_n \end{bmatrix}; \quad \mathbf{G} = \begin{bmatrix} 0 \\ \omega_n^2 \end{bmatrix}$$

$$\begin{bmatrix} \mathbf{G} & \mathbf{FG} \end{bmatrix} = \begin{bmatrix} 0 & \omega_n^2 \\ \omega_n^2 & -2\zeta\omega_n^3 \end{bmatrix} \Rightarrow \text{Rank} = 2$$

$$\mathbf{F} = \begin{bmatrix} 0 & 1 \\ -\omega_n^2 & -2\zeta\omega_n \end{bmatrix}; \quad \mathbf{G} = \begin{bmatrix} \omega_n^2 \\ 0 \end{bmatrix}$$

$$\begin{bmatrix} \mathbf{G} & \mathbf{FG} \end{bmatrix} = \begin{bmatrix} \omega_n^2 & 0 \\ 0 & -\omega_n^4 \end{bmatrix} \Rightarrow \text{Rank} = 2$$

$$\mathbf{F} = \begin{bmatrix} 0 & 1 \\ 0 & b \end{bmatrix}; \quad \mathbf{G} = \begin{bmatrix} b \\ 0 \end{bmatrix}$$

$$\begin{bmatrix} \mathbf{G} & \mathbf{FG} \end{bmatrix} = \begin{bmatrix} b & 0 \\ 0 & 0 \end{bmatrix} \Rightarrow \text{Rank} = 1$$

$$\mathbf{F} = \begin{bmatrix} 0 & 1 \\ 0 & b \end{bmatrix}; \quad \mathbf{G} = \begin{bmatrix} 0 \\ b \end{bmatrix}$$

$$\begin{bmatrix} \mathbf{G} & \mathbf{FG} \end{bmatrix} = \begin{bmatrix} 0 & b \\ b & b^2 \end{bmatrix} \Rightarrow \text{Rank} = 2$$

Requirements for Guaranteed Closed-Loop Stability

Optimal Cost with Feedback Control

With terminal cost = 0

$$\text{With } \Delta\mathbf{u}(t) = -\mathbf{C}(t)\Delta\mathbf{x} = -\mathbf{R}^{-1}\mathbf{G}^T\mathbf{P}(t)\Delta\mathbf{x}$$

$$J^*(t_f) = \frac{1}{2}\int_0^{t_f}\left[\Delta\mathbf{x}^{*T}(t)\mathbf{Q}\Delta\mathbf{x}^*(t) + \Delta\mathbf{u}^{*T}(t)\mathbf{R}\Delta\mathbf{u}^*(t)\right]dt$$

Substitute optimal control law in cost function

$$= \frac{1}{2}\int_0^{t_f}\left[\Delta\mathbf{x}^{*T}(t)\mathbf{Q}\Delta\mathbf{x}^*(t) + \left[-\mathbf{C}(t)\Delta\mathbf{x}^*\right]^T(t)\mathbf{R}\left[-\mathbf{C}(t)\Delta\mathbf{x}^*\right]\right]dt$$

$$= \frac{1}{2}\int_0^{t_f}\left[\Delta\mathbf{x}^{*T}(t)\mathbf{Q}\Delta\mathbf{x}^*(t) + \Delta\mathbf{x}^{*T}(t)\mathbf{C}^T(t)\mathbf{R}\mathbf{C}(t)\Delta\mathbf{x}^*(t)\right]dt$$

Optimal Cost with LQ Feedback Control

Consolidate terms

$$J^*(t_f) = \frac{1}{2}\int_0^{t_f}\left[\Delta\mathbf{x}^{*T}(t)\left[\mathbf{Q}+\mathbf{C}^T(t)\mathbf{R}\mathbf{C}(t)\right]\Delta\mathbf{x}^*(t)\right]dt$$

From eq. 5.4-9, *OCE,* optimal cost depends only on the initial state and

$$J(t_f) = \frac{1}{2}\Delta\mathbf{x}^{*T}(0)\mathbf{P}(0)\Delta\mathbf{x}^*(0)$$

Optimal Quadratic Cost Function is Bounded with LQ Feedback Control

$$J^*(t_f) = \frac{1}{2}\int_0^{t_f}\left[\Delta\mathbf{x}^{*T}(t)\left[\mathbf{Q}+\mathbf{C}^T(t)\mathbf{R}\mathbf{C}(t)\right]\Delta\mathbf{x}^*(t)\right]dt$$

As final time goes to infinity

$$J^*(\infty) = \lim_{t_f\to\infty}\frac{1}{2}\int_0^{t_f}\left[\Delta\mathbf{x}^{*T}(t)\left[\mathbf{Q}+\mathbf{C}^T(t)\mathbf{R}\mathbf{C}(t)\right]\Delta\mathbf{x}^*(t)\right]dt$$

$$\triangleq \frac{1}{2}\int_0^{\infty}\left[\Delta\mathbf{x}^{*T}(t)\left[\mathbf{Q}+\mathbf{C}^T\mathbf{R}\mathbf{C}\right]\Delta\mathbf{x}^*(t)\right]dt = \frac{1}{2}\Delta\mathbf{x}^{*T}(0)\mathbf{P}\Delta\mathbf{x}^*(0)$$

***J* is bounded and positive provided that**

$$\mathbf{Q} > \mathbf{0}$$
$$\mathbf{R} > \mathbf{0}$$

Because *J* is bounded, optimal gain, C, is a stabilizing gain matrix

Requirements for Guaranteeing Stability of the LQ Regulator

$$\Delta\dot{\mathbf{x}}(t) = \mathbf{F}\Delta\mathbf{x}(t) + \mathbf{G}\Delta\mathbf{u}(t) = \left[\mathbf{F} - \mathbf{GC}\right]\Delta\mathbf{x}(t)$$

Closed-loop system is stable whether or not open-loop system is stable if ...

$$\mathbf{Q} > \mathbf{0}$$
$$\mathbf{R} > \mathbf{0}$$

... and (F,G) is a <u>controllable pair</u>

$$\mathrm{Rank}\begin{bmatrix} \mathbf{G} & \mathbf{FG} & \cdots & \mathbf{F}^{n-1}\mathbf{G} \end{bmatrix} = n$$

Lyapunov Stability of the LQ Regulator

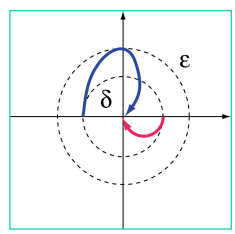

$$\Delta\dot{\mathbf{x}}(t) = \left[\mathbf{F} - \mathbf{GC}\right]\Delta\mathbf{x}(t) = \left[\mathbf{F} - \mathbf{GR}^{-1}\mathbf{G}^T\mathbf{P}\right]\Delta\mathbf{x}(t)$$

Lyapunov function

$$V\left[\Delta\mathbf{x}(t)\right] = \Delta\mathbf{x}^T(t)\mathbf{P}\Delta\mathbf{x}(t) \geq 0$$

Rate of change of Lyapunov function

$$\begin{aligned}\dot{V} &= \Delta\mathbf{x}^T(t)\mathbf{P}\Delta\dot{\mathbf{x}}(t) + \Delta\dot{\mathbf{x}}^T(t)\mathbf{P}\Delta\mathbf{x}(t) \\ &= \Delta\mathbf{x}^T(t)\left\{\mathbf{P}\left[\mathbf{F} - \mathbf{GR}^{-1}\mathbf{G}^T\mathbf{P}\right] + \left[\mathbf{F} - \mathbf{GR}^{-1}\mathbf{G}^T\mathbf{P}\right]^T\mathbf{P}\right\}\Delta\mathbf{x}(t)\end{aligned}$$

Lyapunov Stability of the LQ Regulator

Algebraic Riccati equation

$$\boxed{-\mathbf{Q}-\mathbf{F}^T\mathbf{P}-\mathbf{P}\mathbf{F}+\mathbf{P}\mathbf{G}\mathbf{R}^{-1}\mathbf{G}^T\mathbf{P}=\mathbf{0}}$$

Substituting in rate equation

$$\boxed{\dot{V}=\Delta\mathbf{x}^T(t)\left\{\mathbf{P}\left[\mathbf{F}-\mathbf{G}\mathbf{R}^{-1}\mathbf{G}^T\mathbf{P}\right]+\left[\mathbf{F}-\mathbf{G}\mathbf{R}^{-1}\mathbf{G}^T\mathbf{P}\right]^T\mathbf{P}\right\}\Delta\mathbf{x}(t)}$$

$$\boxed{=-\Delta\mathbf{x}^T(t)\left\{\mathbf{Q}+\mathbf{P}\mathbf{G}\mathbf{R}^{-1}\mathbf{G}^T\mathbf{P}\right\}\Delta\mathbf{x}(t)\leq 0}$$

Defining matrix is positive definite
Therefore, closed-loop system is stable

Less Restrictive Stability Requirements

Q may be *positive semi-definite* if (F,D) is an <u>observable pair</u>, where

$$\boxed{\mathbf{Q}\triangleq\mathbf{D}^T\mathbf{D},\ \text{where } \mathbf{D} \text{ may not be } (n\times n)}$$

Observability requirement

$$\boxed{\text{Rank}\begin{bmatrix}\mathbf{D}^T & \mathbf{F}^T\mathbf{D}^T & \cdots & \left(\mathbf{F}^T\right)^{n-1}\mathbf{D}^T\end{bmatrix}=n}$$

Observability Example

$$\begin{bmatrix} \Delta\dot{x}_1(t) \\ \Delta\dot{x}_2(t) \end{bmatrix} = \begin{bmatrix} 0 & 1 \\ -\omega_n^{\ 2} & -2\zeta\omega_n \end{bmatrix} \begin{bmatrix} \Delta x_1(t) \\ \Delta x_2(t) \end{bmatrix} = \mathbf{F}\Delta\mathbf{x}(t)$$

$$\Delta y(t) = \begin{bmatrix} 0 & 1 \end{bmatrix} \begin{bmatrix} \Delta x_1(t) \\ \Delta x_2(t) \end{bmatrix} = \mathbf{H}\Delta\mathbf{x}(t)$$

For non-zero coefficients, with H = D

$$\begin{bmatrix} \mathbf{H}^T & \mathbf{F}^T\mathbf{H}^T \end{bmatrix} = \begin{bmatrix} 0 & -\omega_n^{\ 2} \\ 1 & -2\zeta\omega_n \end{bmatrix} \Rightarrow \text{Rank} = 2$$

Even Less Restrictive Stability Requirements

- **If F contains stable modes, closed-loop stability is guaranteed if**
  - **(F,G) is a stabilizable pair**
  - **(F,D) is a detectable pair**

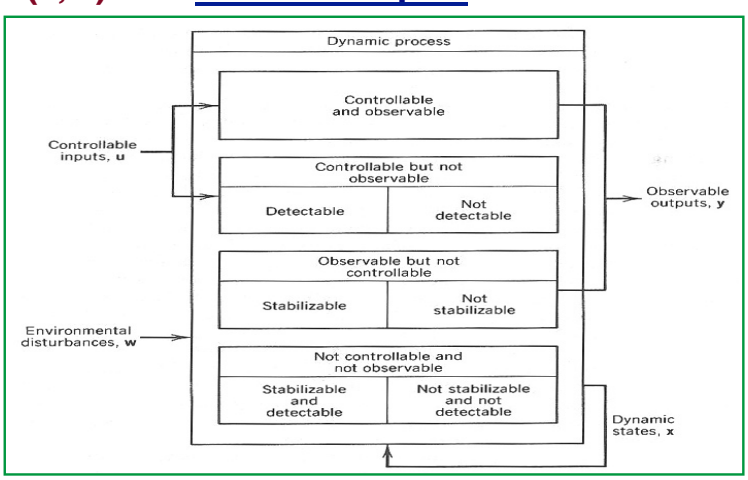

Stability Requirements with Cross Weighting, M, in Cost Function

- If F contains stable modes, closed-loop stability is guaranteed if
  - $[(F - GR^{-1}M^T), G]$ is a <u>stabilizable pair</u>
  - $[(F - GR^{-1}M^T), D]$ is a <u>detectable pair</u>
  - $(Q - GR^{-1}M^T) \geq 0$
  - $R > 0$

<u>Example</u>: LQ Optimal Control of a <u>First-Order LTI System</u>

Cost Function

$$\Delta^2 J = \frac{1}{2}(0)\Delta x^2(t_f) + \lim_{t_f \to \infty} \frac{1}{2}\int_{t_0}^{t_f} \left(q\Delta x^2 + r\Delta u^2\right) dt$$

Open-Loop System

$$\Delta \dot{x} = f\Delta x + g\Delta u$$

Control Law

$$\Delta u = -\frac{gp}{r}\Delta x = -c\Delta x$$

Algebraic Riccati Equation

$$-q - 2fp + \frac{g^2 p^2}{r} = 0$$

$$p^2 - 2\frac{fr}{g^2}p - \frac{qr}{g^2} = 0$$

Choose positive solution of

$$p = \frac{fr}{g^2} \pm \sqrt{\left(\frac{fr}{g^2}\right)^2 + \frac{qr}{g^2}}$$

$$= \frac{fr}{g^2}\left[1 \pm \sqrt{1 + \frac{qg^2}{f^2 r}}\right]$$

Example: LQ Optimal Control of a First-Order LTI System

Closed-Loop System

$$\Delta\dot{x} = \left(f - \frac{g^2 p}{r} \right) \Delta x = (f - c)\Delta x$$

Stability requires that

$$(f - c) < 0$$

If $f < 0$, then **system is stable with no control** $(c = 0)$

Example: LQ Optimal Control of a First-Order LTI System

If $f > 0$ (unstable), and $r > 0$, then $\frac{fr}{g^2} > 0$, and

$$p = \frac{fr}{g^2}\left[1 \pm \sqrt{1 + \frac{qg^2}{f^2 r}}\right]$$

If $q \geq 0$, and $g \neq 0$, then

$$p \xrightarrow[q \to 0]{} \frac{fr}{g^2}\left[1 + \sqrt{1}\right] = \frac{2fr}{g^2}$$

and closed-loop system is, as $q \to 0$,

$$\left(f - \frac{g^2}{r} p \right) = \left(f - \frac{g^2}{r}\frac{2fr}{g^2} \right) = (f - 2f) = -f$$

Stable closed-loop system is "mirror image" of unstable open-loop system when $q = 0$

Caveat

- **If …**

$$\boxed{(\mathbf{F},\mathbf{G})_{assumed} \neq (\mathbf{F},\mathbf{G})_{actual}}$$

- **… all bets about optimal feedback control <u>stability</u> are off (for the moment)**
- **The <u>robustness</u> of optimal control with parameter uncertainty remains to be determined**

Solution of the Algebraic Riccati Equation

Solution Methods for the Continuous-Time Algebraic Riccati Equation

$$\boxed{-\mathbf{Q} - \mathbf{F}^T\mathbf{P} - \mathbf{P}\mathbf{F} + \mathbf{P}\mathbf{G}\mathbf{R}^{-1}\mathbf{G}^T\mathbf{P} = \mathbf{0}}$$

1) Integrate Riccati differential equation to steady state
2) Explicit scalar equations for elements of **P**
   a) Difficult for $n > 3$
   b) May use symbolic math (*MATLAB Symbolic Math Toolbox, Mathematica*, ...)

Example: Scalar Solution for the Algebraic Riccati Equation

$$\boxed{-\mathbf{Q} - \mathbf{F}^T\mathbf{P} - \mathbf{P}\mathbf{F} + \mathbf{P}\mathbf{G}\mathbf{R}^{-1}\mathbf{G}^T\mathbf{P} = \mathbf{0}}$$

Second-order example

$$-\begin{bmatrix} q_{11} & 0 \\ 0 & q_{22} \end{bmatrix} - \begin{bmatrix} f_{11} & f_{12} \\ f_{21} & f_{22} \end{bmatrix}^T \begin{bmatrix} p_{11} & p_{12} \\ p_{12} & p_{22} \end{bmatrix} - \begin{bmatrix} p_{11} & p_{12} \\ p_{12} & p_{22} \end{bmatrix} \begin{bmatrix} f_{11} & f_{12} \\ f_{21} & f_{22} \end{bmatrix}$$
$$+ \begin{bmatrix} p_{11} & p_{12} \\ p_{12} & p_{22} \end{bmatrix} \begin{bmatrix} g_{11} & g_{12} \\ g_{21} & g_{22} \end{bmatrix} \begin{bmatrix} r_{11} & 0 \\ 0 & r_{22} \end{bmatrix}^{-1} \begin{bmatrix} g_{11} & g_{12} \\ g_{21} & g_{22} \end{bmatrix}^T \begin{bmatrix} p_{11} & p_{12} \\ p_{12} & p_{22} \end{bmatrix} = 0$$

Solve three scalar equations for p_{11}, p_{12}, and p_{22}

More Solutions for the Algebraic Riccati Equation

$$\boxed{-\mathbf{Q} - \mathbf{F}^T\mathbf{P} - \mathbf{P}\mathbf{F} + \mathbf{P}\mathbf{G}\mathbf{R}^{-1}\mathbf{G}^T\mathbf{P} = \mathbf{0}}$$

- See *OCE, Section 6.1* for
  - Kalman-Englar method
  - Kleinman's method
  - MacFarlane-Potter method
  - Laub's method [used in MATLAB]

Equilibrium Response to a Command Input

Steady-State Response to Command Input of Open-Loop System

$$\Delta\dot{\mathbf{x}}(t) = \mathbf{F}\Delta\mathbf{x}(t) + \mathbf{G}\Delta\mathbf{u}(t) + \mathbf{L}\Delta\mathbf{w}(t),$$

$$\Delta\mathbf{x}(t_0)\ given$$

$$\Delta\mathbf{y}(t) = \mathbf{H}_\mathbf{x}\Delta\mathbf{x}(t) + \mathbf{H}_\mathbf{u}\Delta\mathbf{u}(t) + \mathbf{H}_\mathbf{w}\Delta\mathbf{w}(t)$$

State equilibrium with constant inputs (.)* ...

$$\mathbf{0} = \mathbf{F}\Delta\mathbf{x}^* + \mathbf{G}\Delta\mathbf{u}^* + \mathbf{L}\Delta\mathbf{w}^*$$

$$\Delta\mathbf{x}^* = -\mathbf{F}^{-1}\left(\mathbf{G}\Delta\mathbf{u}^* + \mathbf{L}\Delta\mathbf{w}^*\right)$$

... constrained by requirement to satisfy command input

$$\Delta\mathbf{y}^* = \mathbf{H}_\mathbf{x}\Delta\mathbf{x}^* + \mathbf{H}_\mathbf{u}\Delta\mathbf{u}^* + \mathbf{H}_\mathbf{w}\Delta\mathbf{w}^*$$

Steady-State Response to Commands

Equilibrium that satisfies a command input, $\Delta\mathbf{y}_C$

$$\mathbf{0} = \mathbf{F}\Delta\mathbf{x}^* + \mathbf{G}\Delta\mathbf{u}^* + \mathbf{L}\Delta\mathbf{w}^*$$

$$\Delta\mathbf{y}^* = \mathbf{H}_\mathbf{x}\Delta\mathbf{x}^* + \mathbf{H}_\mathbf{u}\Delta\mathbf{u}^* + \mathbf{H}_\mathbf{w}\Delta\mathbf{w}^*$$

Combine equations for simultaneous solution

$$\begin{bmatrix} \mathbf{0} \\ \Delta\mathbf{y}_C \end{bmatrix} = \begin{bmatrix} \mathbf{F} & \mathbf{G} \\ \mathbf{H}_\mathbf{x} & \mathbf{H}_\mathbf{u} \end{bmatrix} \begin{bmatrix} \Delta\mathbf{x}^* \\ \Delta\mathbf{u}^* \end{bmatrix} + \begin{bmatrix} \mathbf{L} \\ \mathbf{H}_\mathbf{w} \end{bmatrix} \Delta\mathbf{w}^*$$

(n + r) x (n + m)

Equilibrium Values of State and Control to Satisfy Command Input

Equilibrium that satisfies a commanded input, Δy_C

$$\begin{bmatrix} \Delta \mathbf{x}^* \\ \Delta \mathbf{u}^* \end{bmatrix} = \begin{bmatrix} \mathbf{F} & \mathbf{G} \\ \mathbf{H_x} & \mathbf{H_u} \end{bmatrix}^{-1} \begin{bmatrix} -\mathbf{L}\Delta \mathbf{w}^* \\ \Delta \mathbf{y}_C - \mathbf{H_w}\Delta \mathbf{w}^* \end{bmatrix}$$

$$\triangleq \mathbf{A}^{-1} \begin{bmatrix} -\mathbf{L}\Delta \mathbf{w}^* \\ \Delta \mathbf{y}_C - \mathbf{H_w}\Delta \mathbf{w}^* \end{bmatrix}$$

A must be square for inverse to exist

Then, number of commands = number of controls

Inverse of the Matrix

$$\begin{bmatrix} \mathbf{F} & \mathbf{G} \\ \mathbf{H_x} & \mathbf{H_u} \end{bmatrix}^{-1} \triangleq \mathbf{A}^{-1} = \mathbf{B} = \begin{bmatrix} \mathbf{B}_{11} & \mathbf{B}_{12} \\ \mathbf{B}_{21} & \mathbf{B}_{22} \end{bmatrix}$$

$$\begin{bmatrix} \Delta \mathbf{x}^* \\ \Delta \mathbf{u}^* \end{bmatrix} = \begin{bmatrix} \mathbf{B}_{11} & \mathbf{B}_{12} \\ \mathbf{B}_{21} & \mathbf{B}_{22} \end{bmatrix} \begin{bmatrix} -\mathbf{L}\Delta \mathbf{w}^* \\ \Delta \mathbf{y}_C - \mathbf{H_w}\Delta \mathbf{w}^* \end{bmatrix}$$

$\mathbf{B}_{ij}$ have same dimensions as equivalent blocks of A

Equilibrium that satisfies a commanded input, Δy_C

$$\Delta \mathbf{x}^* = -\mathbf{B}_{11}\mathbf{L}\Delta \mathbf{w}^* + \mathbf{B}_{12}\left(\Delta \mathbf{y}_C - \mathbf{H_w}\Delta \mathbf{w}^*\right)$$

$$\Delta \mathbf{u}^* = -\mathbf{B}_{21}\mathbf{L}\Delta \mathbf{w}^* + \mathbf{B}_{22}\left(\Delta \mathbf{y}_C - \mathbf{H_w}\Delta \mathbf{w}^*\right)$$

Elements of Matrix Inverse and Solutions for Open-Loop Equilibrium

Substitution and elimination ***(see Supplement)***

$$\begin{bmatrix} \mathbf{B}_{11} & \mathbf{B}_{12} \\ \mathbf{B}_{21} & \mathbf{B}_{22} \end{bmatrix} = \begin{bmatrix} \mathbf{F}^{-1}\left(-\mathbf{G}\mathbf{B}_{21} + \mathbf{I}_n\right) & -\mathbf{F}^{-1}\mathbf{G}\mathbf{B}_{22} \\ -\mathbf{B}_{22}\mathbf{H}_{\mathbf{x}}\mathbf{F}^{-1} & \left(-\mathbf{H}_{\mathbf{x}}\mathbf{F}^{-1}\mathbf{G} + \mathbf{H}_{\mathbf{u}}\right)^{-1} \end{bmatrix}$$

Solve for $\mathbf{B}_{22}$, then $\mathbf{B}_{12}$ and $\mathbf{B}_{21}$, then $\mathbf{B}_{11}$

$$\Delta\mathbf{x}^* = \mathbf{B}_{12}\Delta\mathbf{y}_C - \left(\mathbf{B}_{11}\mathbf{L} + \mathbf{B}_{12}\mathbf{H}_{\mathbf{w}}\right)\Delta\mathbf{w}^*$$
$$\Delta\mathbf{u}^* = \mathbf{B}_{22}\Delta\mathbf{y}_C - \left(\mathbf{B}_{21}\mathbf{L} + \mathbf{B}_{22}\mathbf{H}_{\mathbf{w}}\right)\Delta\mathbf{w}^*$$

LQ Regulator with Command Input (Proportional Control Law)

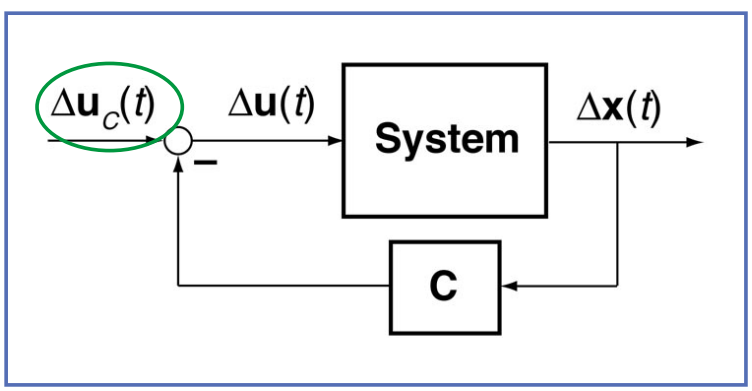

$$\Delta\mathbf{u}(t) = \Delta\mathbf{u}_C(t) - \mathbf{C}\Delta\mathbf{x}(t)$$

How do we define $\Delta\mathbf{u}_C(t)$?

Non-Zero Steady-State Regulation with LQ Regulator

Command input provides equivalent state and control values for the LQ regulator

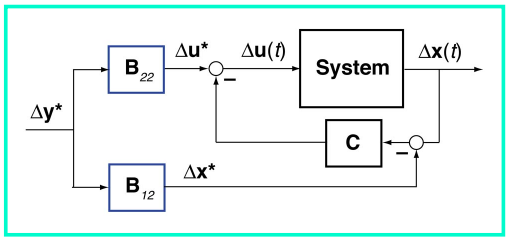

Control law with command input

$$\begin{aligned}\Delta\mathbf{u}(t) &= \Delta\mathbf{u}^*(t) - \mathbf{C}\left[\Delta\mathbf{x}(t) - \Delta\mathbf{x}^*(t)\right] \\ &= \mathbf{B}_{22}\Delta\mathbf{y}^* - \mathbf{C}\left[\Delta\mathbf{x}(t) - \mathbf{B}_{12}\Delta\mathbf{y}^*\right] \\ &= \left(\mathbf{B}_{22} + \mathbf{C}\mathbf{B}_{12}\right)\Delta\mathbf{y}^* - \mathbf{C}\Delta\mathbf{x}(t)\end{aligned}$$

LQ Regulator with Forward Gain Matrix

$$\begin{aligned}\Delta\mathbf{u}(t) &= \Delta\mathbf{u}^*(t) - \mathbf{C}\left[\Delta\mathbf{x}(t) - \Delta\mathbf{x}^*(t)\right] \\ &= \mathbf{C}_F\Delta\mathbf{y}^* - \mathbf{C}_B\Delta\mathbf{x}(t)\end{aligned}$$

$$\mathbf{C}_F \triangleq \mathbf{B}_{22} + \mathbf{C}\mathbf{B}_{12}$$
$$\mathbf{C}_B \triangleq \mathbf{C}$$

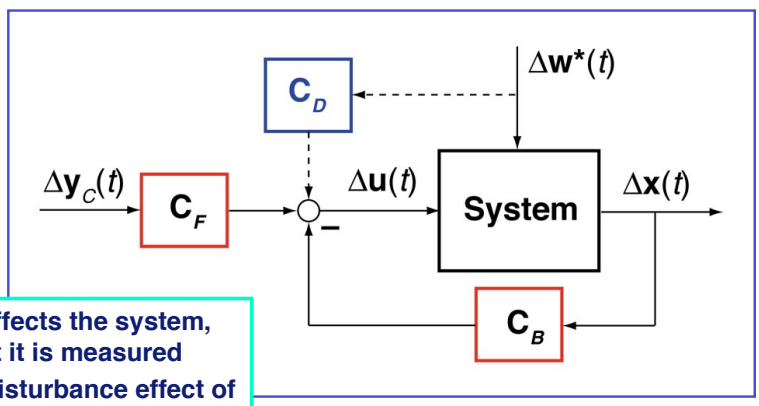

- Disturbance affects the system, whether or not it is measured
- If measured, disturbance effect of can be countered by $\mathbf{C}_D$ (analogous to $\mathbf{C}_F$)

Next Time:
Cost Functions and Controller Structures

Supplemental Material

Square-Root Solution for the Algebraic Riccati Equation

$$-\mathbf{Q}-\mathbf{F}^T\mathbf{P}-\mathbf{P}\mathbf{F}+\mathbf{P}\mathbf{G}\mathbf{R}^{-1}\mathbf{G}^T\mathbf{P}=\mathbf{0}$$

Square root of P:

$$\mathbf{P}\triangleq\mathbf{D}\mathbf{D}^T;\quad \mathbf{D}\triangleq\sqrt{\mathbf{P}}$$

where

$$\mathbf{D}=\begin{bmatrix} d_{11} & 0 & \cdots & 0 \\ d_{11} & d_{11} & \cdots & 0 \\ \cdots & \cdots & \cdots & \cdots \\ d_{11} & d_{11} & \cdots & d_{11} \end{bmatrix}$$

Integrate D to steady state

$$\dot{\mathbf{D}}(t)=\mathbf{D}^T\mathbf{M}_{LT}(t),\quad \mathbf{D}(t_f)\mathbf{D}^T(t_f)=\mathbf{P}\left(t_f\,\middle|\,t_f\to\infty\right)$$

$$\begin{aligned}\mathbf{M}(t)&\triangleq\mathbf{M}_{LT}(t)+\mathbf{M}_{UT}(t)\\ &=-\mathbf{D}^{-1}(t)\mathbf{F}^T\mathbf{D}(t)-\mathbf{D}^T(t)\mathbf{F}^T\mathbf{D}^{-T}(t)-\mathbf{D}^{-1}(t)\mathbf{Q}\mathbf{D}^{-T}(t)+\mathbf{D}^T(t)\mathbf{G}\mathbf{R}^{-1}\mathbf{G}^T\mathbf{D}^{-T}(t)\end{aligned}$$

$$\begin{aligned}\Delta\mathbf{u}(t)&=-\mathbf{R}^{-1}\left[\mathbf{G}^T\mathbf{D}_{SS}\mathbf{D}_{SS}^T\right]\Delta\mathbf{x}(t)\\ &=-\mathbf{C}_{SS}\Delta\mathbf{x}(t)\end{aligned}$$

and

$$(m_{ij})_{LT}(t)=\begin{cases}0 & i<j\\ \frac{1}{2}m_{ij}\ , & i=j\\ m_{ij} & i>j\end{cases}$$

Matrix Inverse Identity OCE, eq. 2.2-57 to -67

$$\begin{bmatrix}\mathbf{B}_{11} & \mathbf{B}_{12}\\ \mathbf{B}_{21} & \mathbf{B}_{22}\end{bmatrix}\begin{bmatrix}\mathbf{A}_{11} & \mathbf{A}_{12}\\ \mathbf{A}_{21} & \mathbf{A}_{22}\end{bmatrix}\triangleq\mathbf{I}_{m+n}=\begin{bmatrix}\mathbf{I}_n & 0\\ 0 & \mathbf{I}_m\end{bmatrix}$$

$$\begin{bmatrix}\mathbf{B}_{11} & \mathbf{B}_{12}\\ \mathbf{B}_{21} & \mathbf{B}_{22}\end{bmatrix}\begin{bmatrix}\mathbf{A}_{11} & \mathbf{A}_{12}\\ \mathbf{A}_{21} & \mathbf{A}_{22}\end{bmatrix}=\begin{bmatrix}(\mathbf{B}_{11}\mathbf{A}_{11}+\mathbf{B}_{12}\mathbf{A}_{21}) & (\mathbf{B}_{11}\mathbf{A}_{12}+\mathbf{B}_{12}\mathbf{A}_{22})\\ (\mathbf{B}_{21}\mathbf{A}_{11}+\mathbf{B}_{22}\mathbf{A}_{21}) & (\mathbf{B}_{21}\mathbf{A}_{12}+\mathbf{B}_{22}\mathbf{A}_{22})\end{bmatrix}$$

$$\begin{aligned}(\mathbf{B}_{11}\mathbf{A}_{11}+\mathbf{B}_{12}\mathbf{A}_{21})&=\mathbf{I}_n\\ (\mathbf{B}_{11}\mathbf{A}_{12}+\mathbf{B}_{12}\mathbf{A}_{22})&=\mathbf{0}\\ (\mathbf{B}_{21}\mathbf{A}_{11}+\mathbf{B}_{22}\mathbf{A}_{21})&=\mathbf{0}\\ (\mathbf{B}_{21}\mathbf{A}_{12}+\mathbf{B}_{22}\mathbf{A}_{22})&=\mathbf{I}_m\end{aligned}$$

Solve for $\mathbf{B}_{22}$, then $\mathbf{B}_{12}$ and $\mathbf{B}_{21}$, then $\mathbf{B}_{11}$